02 9452-3566
sales@getpacked.com.au

PSW-02 PackSync™

Strapping x Wrapping
Integrated Pallet Packaging Solution

TRANSPAK Integrated Pallet Packaging Solution combines the globally proven TP-733VLM Fully Automatic Pallet Strapping Machine with the WST-02 Turntable Stretch Wrapping Machine to provide a highly efficient and reliable pallet packaging process. This integrated solution completes both strapping and wrapping in one station. By combining the two machines into one system, it reduces installation space, lowers labor and installation costs, and significantly improves packaging efficiency. With the dual protection of strapping and wrapping, the system enhances load stability and transportation safety, making it an ideal solution for improving packaging quality, reducing operating costs, and advancing warehouse and production automation.



Made in Taiwan

11.2026
Subject to revision

Features

- **Integrated TP-733VLM + WST-02**
  One-station strapping and wrapping for reduced manual handling and improved packaging efficiency
- **Flexible Packaging Modes**
  Supports multiple operating modes: Strapping Only, Wrapping Only, or Strapping + Wrapping
- **Siemens HMI & PLC Control**
  Intuitive HMI for easy selection of strapping and wrapping functions
- **Space-Saving Design**
  Turntable installed beneath the strapping arch, minimize the overall footprint
- **Lower Total Investment**
  Shared turntable design eliminates additional conveyors, reducing equipment, installation, and overall costs
- **ARES TP-733-SH Strapping Head**
  Uses German-made DC brushless motor, delivering up to 3,200 N of strapping tension
- **Movable Strapping Head**
  500 mm stroke accommodates various pallet sizes while ensuring optimal strap tension

Options

- **Access ramp**
- **Multiple arch sizes and turntable diameters available**
- **Various pre-stretch film carriage options**
- **Film cutting device**
- **Index head stroke up to 700 mm**
- **Additional options available upon request**

Dimensions

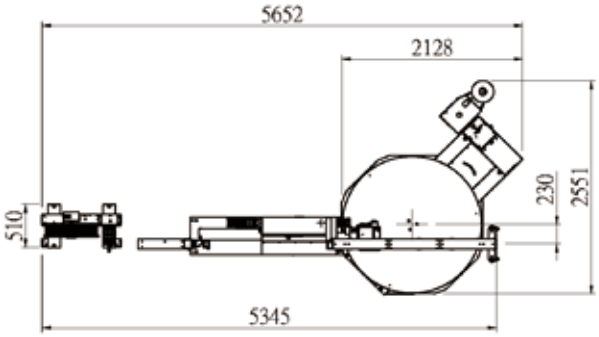

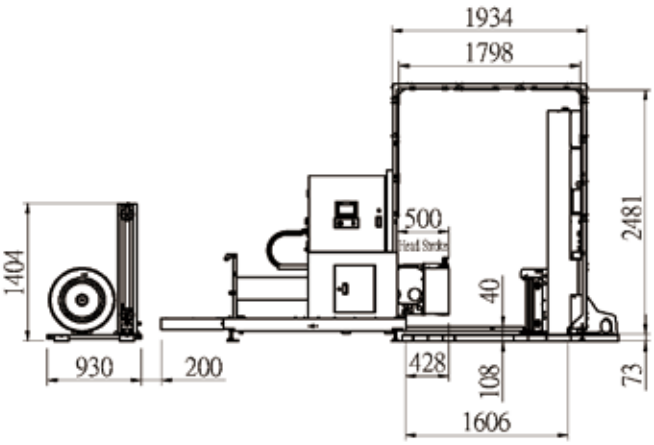

Technical Data

Turntable Size	Ø1650 mm (Standard)
Pallet Height	Max. 2300 mm (Standard)
Load Capacity	500 – 2000 kg
Strap Type / Width	PP / PET 9 mm, 12 mm, 15.5 mm, or 19 mm
Tension Range	1,100 – 3,200 N (Standard) 200 – 1,200 N (Optional)
Strap Core Size	406 mm
Max. Package Size	(W) 800 mm x (L) 1200 mm
Min. Package Size	(W) 400 mm x (L) 662 mm (W) 400 mm x (L) 712 mm (19mm)

Get Packed
02 9452-3566
sales@getpacked.com.au
Get Packed Pty Ltd | 12 Cook Street Forestville NSW 2087 | www.getpacked.com.au | +61294523566